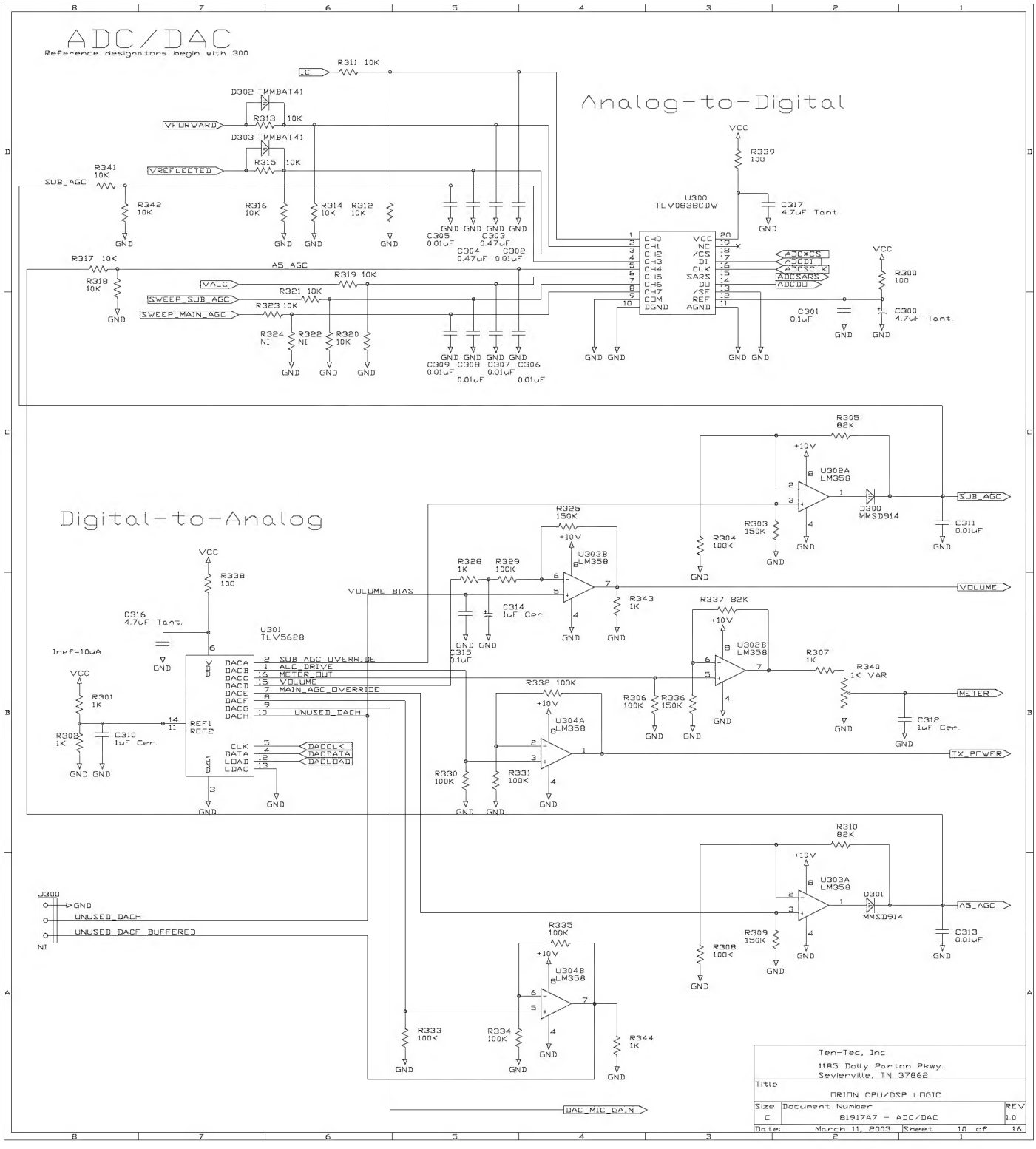
ADC/DAC
Reference designators begin with 300
Analog-to-Digital
Digital-to-Analog
U300
TLV0838CDW
U301
TLV5628
U302A LM358
U302B LM358
U303A LM358
U303B LM358
U304A LM358
U304B LM358
D300 MMSD914
D301 MMSD914
D302 TMMBAT41
D303 TMMBAT41
J300
Iref=10uA
VCC
GND
SUB_AGC
AS_AGC
VALC
SWEEP_SUB_AGC
SWEEP_MAIN_AGC
VFORWARD
VREFLECTED
VOLUME_BIAS
VOLUME
METER
TX_POWER
DAC_MIC_GAIN
ADCCS
ADCDI
ADCSCLK
ADCSARS
ADCDO
DACCLK
DACDATA
DACLOAD
SUB_AGC_OVERRIDE
ALC_DRIVE
METER_OUT
VOLUME
MAIN_AGC_OVERRIDE
UNUSED_DACH
UNUSED_DACF_BUFFERED
Ten-Tec, Inc.
1185 Dolly Parton Pkwy.
Sevierville, TN 37862
Title
ORION CPU/DSP LOGIC
Size C
Document Number 81917A7 - ADC/DAC
REV 1.0
Date: March 11, 2003
Sheet 10 of 16